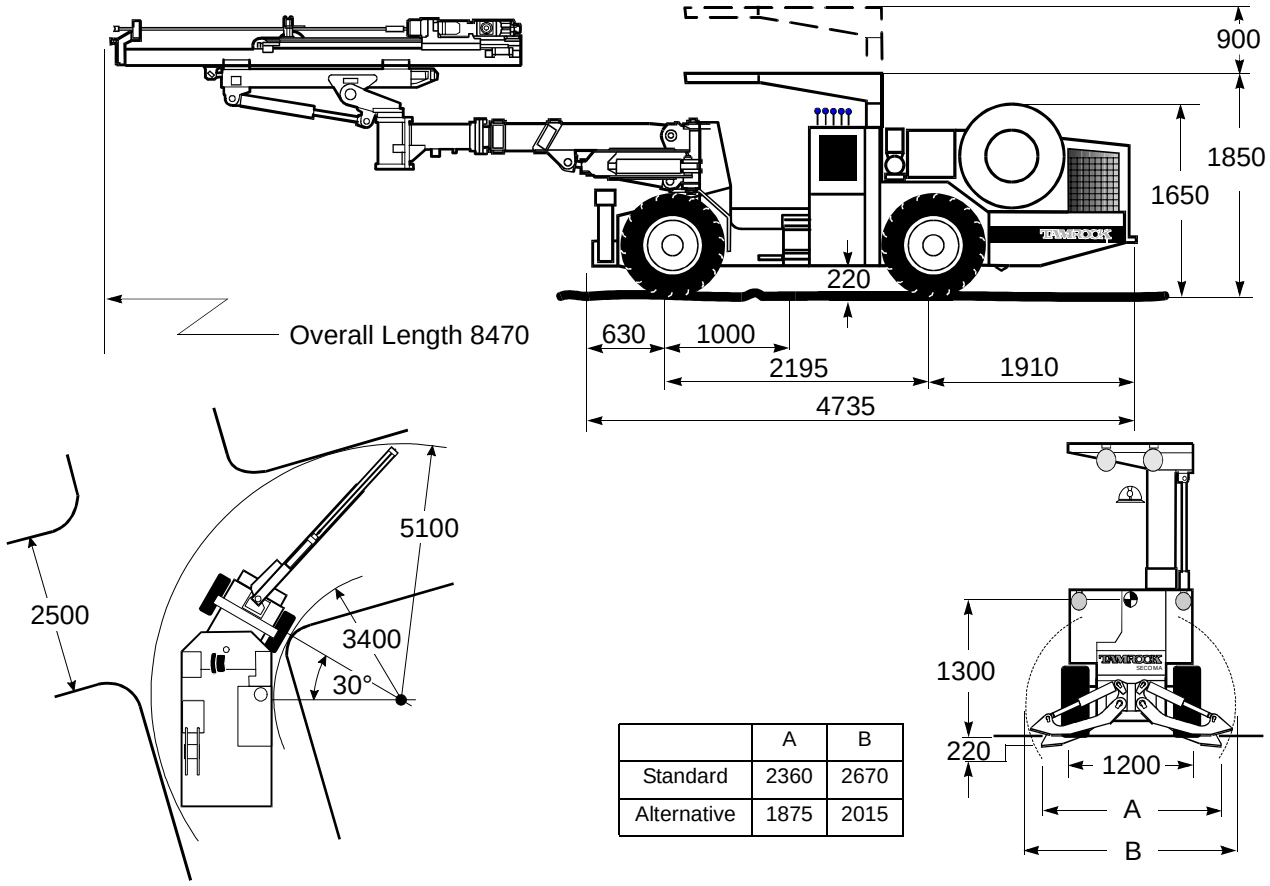

	A	B
Standard	2360	2670
Alternative	1875	2015

High power compact multi-purposes drill,
four wheel drive hydraulic jumbo,
for development, bolting and/or production in narrow vein mining.

Rock drill

	Standard	*Alternative*
Model	Hydrastar 200 F	Hydrastar 300 NV
Standard male shank	R 32/R 38	R 32/R 38/T38
Weight	115 kg	137 kg
Impact frequency	40-65 Hz	40-55 Hz
Percussion pressure	140-200 bar	160-180 bar
Impact power	6-10 kW	12-16 kW

Drill feed

Model ..... NVF
Steel length ..... 6/8 or 8/10 ft
Drill steel ..... H 25 till H 35 - ø 39

Boom

Model ..... B 14 NV
Type ..... Universal
Weight (with hoses) ..... 1200 kg
Feed roll-over ..... 320°
Feed angle ..... ± 95°
Boom extension ..... 800 mm
Feed extension ..... 1400 mm

Hydraulic control panel

Model ..... I.B.C.Q.NV
Providing ..... auto smooth collaring
precise anti-jamming
only one control lever for thrust/percussion (full & half)
greatly reduced number of hoses

Power Pack

Model ..... P.P. 37 kW / 3.2 Q
Electrical motor ..... 37 kW (50 hp)
Hydraulic pump ..... fixed displacement, radial piston

Tramming possibilities

Tramming speed ..... up to 6.5 km/h
Maximum operating grade ..... up to 35%
Weight, approximate ..... 7300 kg

SANDVIK TAMROCK SECOMA reserves the right to change this specification without further notice.

AREAS COVERED

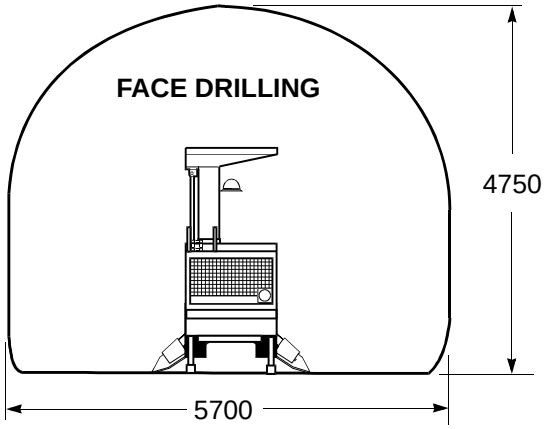

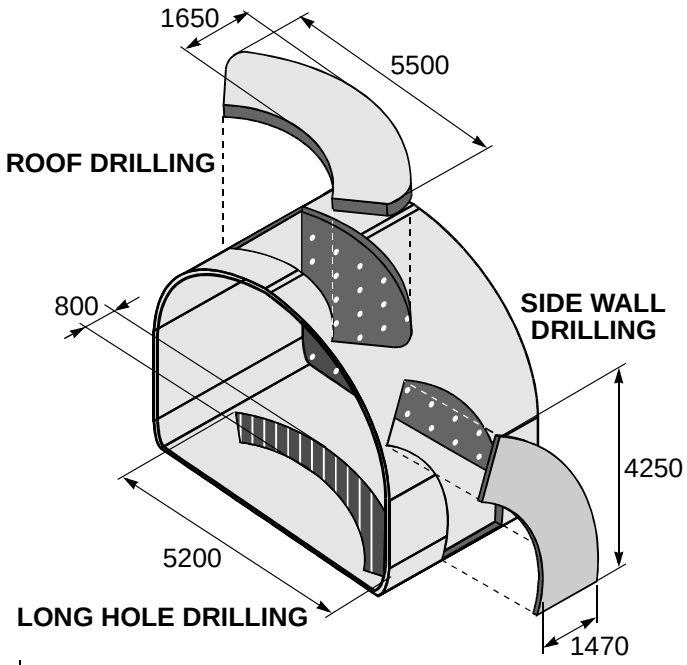

Carrier ..... Quasar

Service capacities

Fuel tank ..... 60 litre
Hydraulic tank ..... 130 litre

Engine

Diesel ..... 3-cyl. Deutz F3L912W
Max. rating at 2300 rpm ..... 41 hp (30 kW)
Cooling system ..... Air-cooled
Exhaust treatment ..... ECS purifier

Hydrostatic Transmission

One Pump ..... Variable displacement
Axial piston, 0-75 cm^3/rev
Four Wheel-motor ..... Radial piston

Oscillation

Rear ..... ± 6°

Wheels

Tyres ..... 10.00 x 15

Steering ..... 1 hydraulic cylinder
Steering control ..... Stick steering
Articulation angle ..... 30° either side from center line

Service Brake ..... Hydrostatic transmission

Parking and Emergency Brakes

Type ..... Hydraulic oil immersed
multiple disc brakes on each wheel
Actuation ..... Emergency button
Spring applied, hydraulically released type

Stabilizers	*Standard*	*Alternative*
Front	2 outriggers S.F.S.O. 27	2 outriggers
Rear		2 jacks

Telescopic canopy ..... T.C. 1
Lowering capability ..... 900 mm

Oil Cooler

Type ..... O.C. 25, water-actuated counterflow
Cooling capacity ..... 25 kW

Rock Drill Lubrication

Mine air + Compressor ..... C.T. 1, piston
Volume / Pressure ..... 400 l/min - 4 bar
Motor ..... Electric - 4 hp (3 kW)

Water Flushing

Water booster pump ..... W.B.P. 2, centrifugal
Volume/Pressure ..... 4000 l/h - 15 bar
Motor ..... Electric - 5.5 hp (4 kW)

Electrical system

High/Low voltage ..... Separate cabinets
Voltage ..... *Standard* ..... 380 - 660 V
Alternative ..... 1000 V
Frequency ..... 50 or 60 Hz

Cable Reel C.R.Q.
Capacity ..... 100 m of cable 32 mm O.D.

Lighting

Working light ..... *Standard* . Two 24 V x 70 W/W.L. 2.70
Alternative .. Two 24 V x 150 W halogen
Tramming light ..... Three 24 V x 70 W/T.L. 3.70
Tail light ..... One 24 V x 15 W red light

Alternative

Equipment for long hole function:

- specific hydraulic components (back pressure compensator, screwing/unscrewing ...).
- hydraulic stinger on drill feed + controls.
- front clamping centralizer on drill feed + controls.

Equipment for remote control:

- electro-valves for remote control implementation.
- water-proofed electric remote control relays cabinet.

Optional equipment

H.A.R. Rock drill auto-return.
ANSUL Fire Suppression System LTA 101-30 (6 jets).
Spare wheel.
Electric cable.
Ground fault detector (not applicable to 1000 V).
Fume diluter.
Inclinometers for long hole function.

Remote control:

- portable electric remote control.
- one 24 V x 150 W pedestal mounted halogen light.

SANDVIK TAMROCK SECOMA reserves the right to change this specification without further notice.

SANDVIK TAMROCK SECOMA S.A., B.P. 46 - 69881 Meyzieu Cedex, France
Tel. int. + 33 4 72 45 22 00, Telex 300526 F
Telefax int. + 33 4 7831 7980